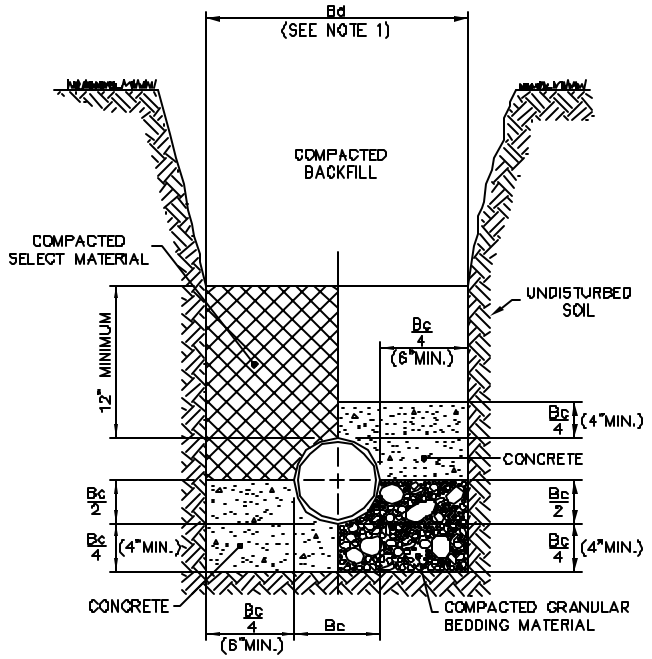

CLASS "A" BEDDING
SPECIAL CONDITIONS

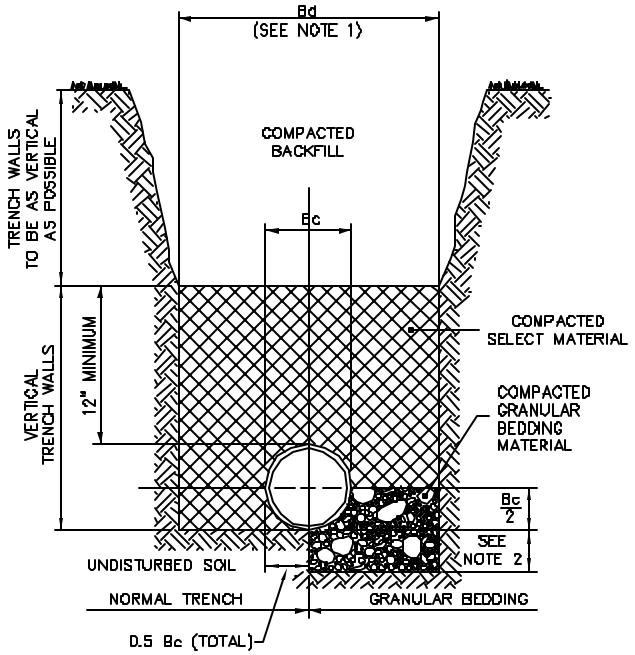

CLASS "B" BEDDING
NORMAL CONDITIONS

NOTES: FOR BEDDING AND TRENCHING

1. Dimension Bc = Pipe O.D.
   Dimension Bd = Trench Width at Top of Pipe
   Maximum Bd = Bc + 30"
   Minimum Bd = Maximum Dimension of Bell + 8" (Unsheeted Trench)

2. Depth for removal for unsuitable material shall be as required to reach suitable foundation. For rock or other non-cushioning material, depth shall be 6" below bottom of utility.

3. All backfill and select material under all roadways, drives (including dirt drives), and parking areas shall be compacted to 98% of the modified proctor maximum dry density. (AASHTO T-180). Backfill and select material under all other areas shall be compacted as follows: From bottom of trench to 12" above top of pipe - 95% of modified proctor maximum dry density (AASHTO T-180). From 12" above top of pipe to top of backfill - 90% of modified proctor maximum dry density (AASHTO T-180)

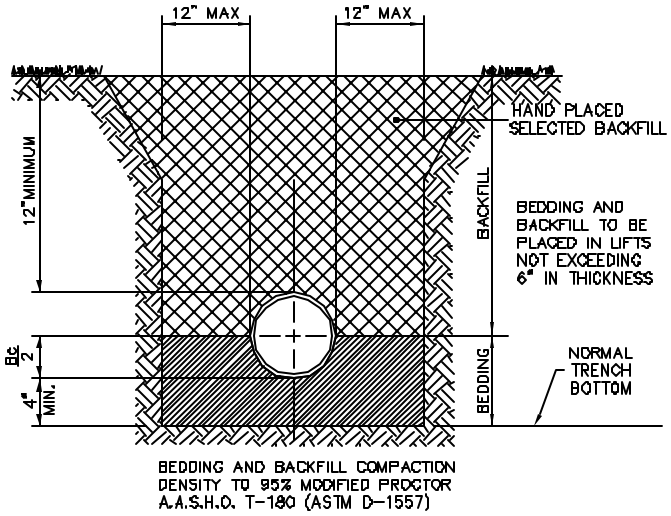

SANITARY SEWER
PIPE BEDDING

BEDDING DETAILS

NOT TO SCALE

City of Leesburg
Standard Details

FARNER BARLEY AND ASSOCIATES, INC.
▲ ENGINEERS
▲ SURVEYORS
▲ PLANNERS
350 North Sinclair Avenue ○ Tavares, Florida 32778 ○ (352) 343-8481

April 2004

Detail G-3