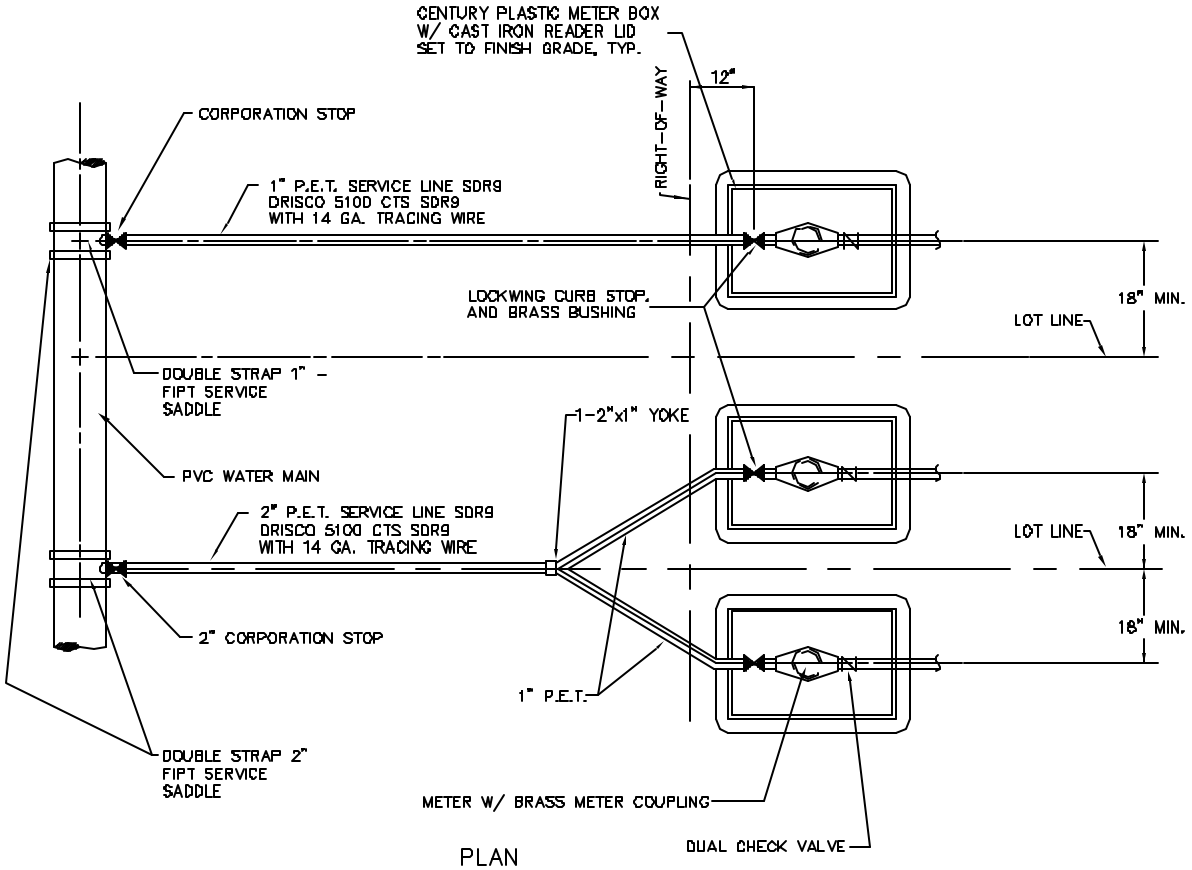

PLAN

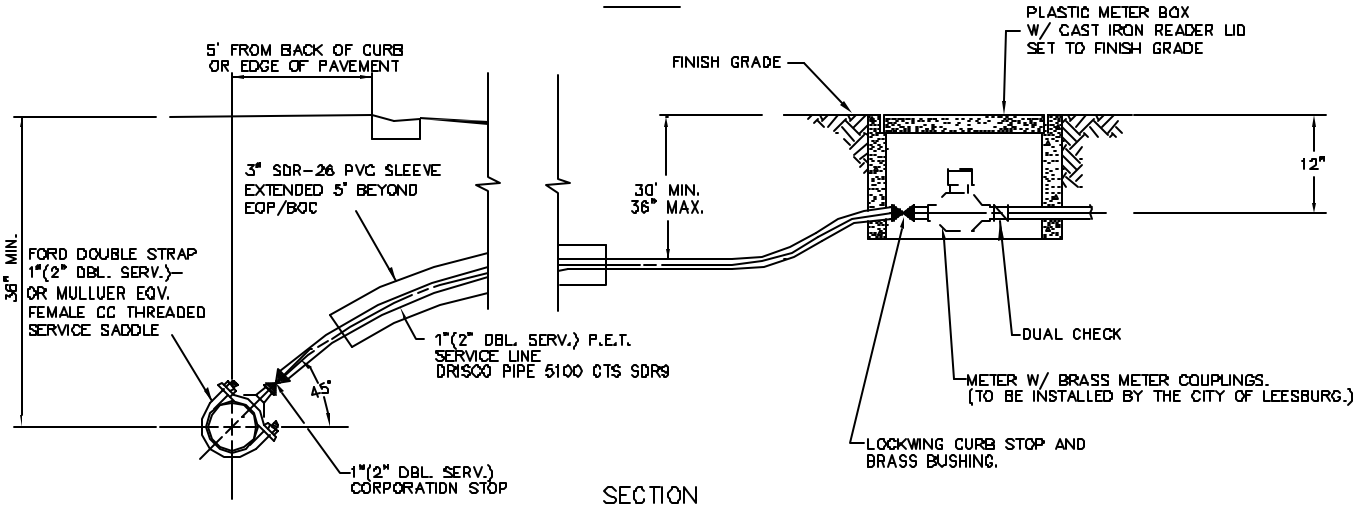

SECTION

WATER SERVICE CONNECTION DETAILS

NOT TO SCALE

(NOTE: METERS TO BE INSTALLED BY CITY OF LEESBURG.)

City of Leesburg
Standard Details

FARNER BARLEY AND ASSOCIATES, INC.
▲ ENGINEERS
▲ SURVEYORS
▲ PLANNERS
350 North Sinclair Avenue ○ Tavares, Florida 32778 ○ (352) 343-8481

April 2004

Detail W-9