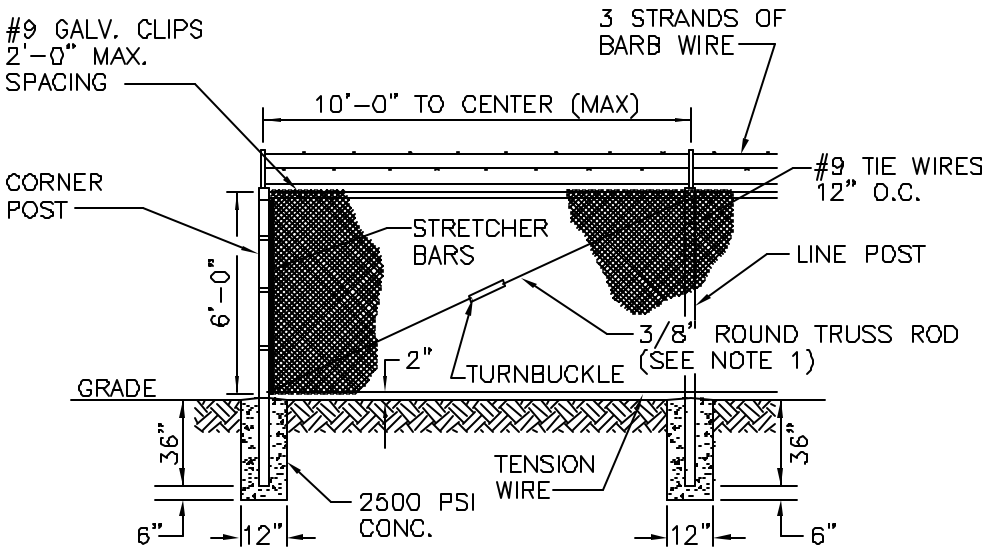

FENCE DETAIL

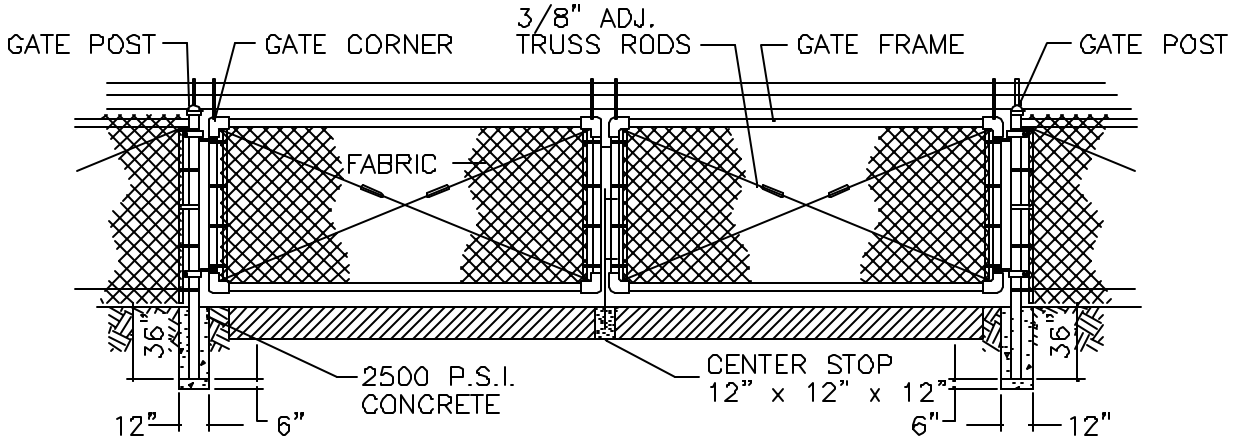

DOUBLE SWING GATE DETAIL

NOTES:
1. TRUSS BARS ARE REQUIRED FOR EACH GATE SECTION AND THE FIRST SPAN ON EACH SIDE OF A CORNER POST ONLY.

CHAIN LINK FENCE DETAIL

NOT TO SCALE

City of Leesburg
Standard Details

FARNER BARLEY AND ASSOCIATES, INC.
▲ ENGINEERS
▲ SURVEYORS
▲ PLANNERS
350 North Sinclair Avenue ◊ Tavares, Florida 32778 ◊ (352) 343-8481

April 2004

Detail G-12