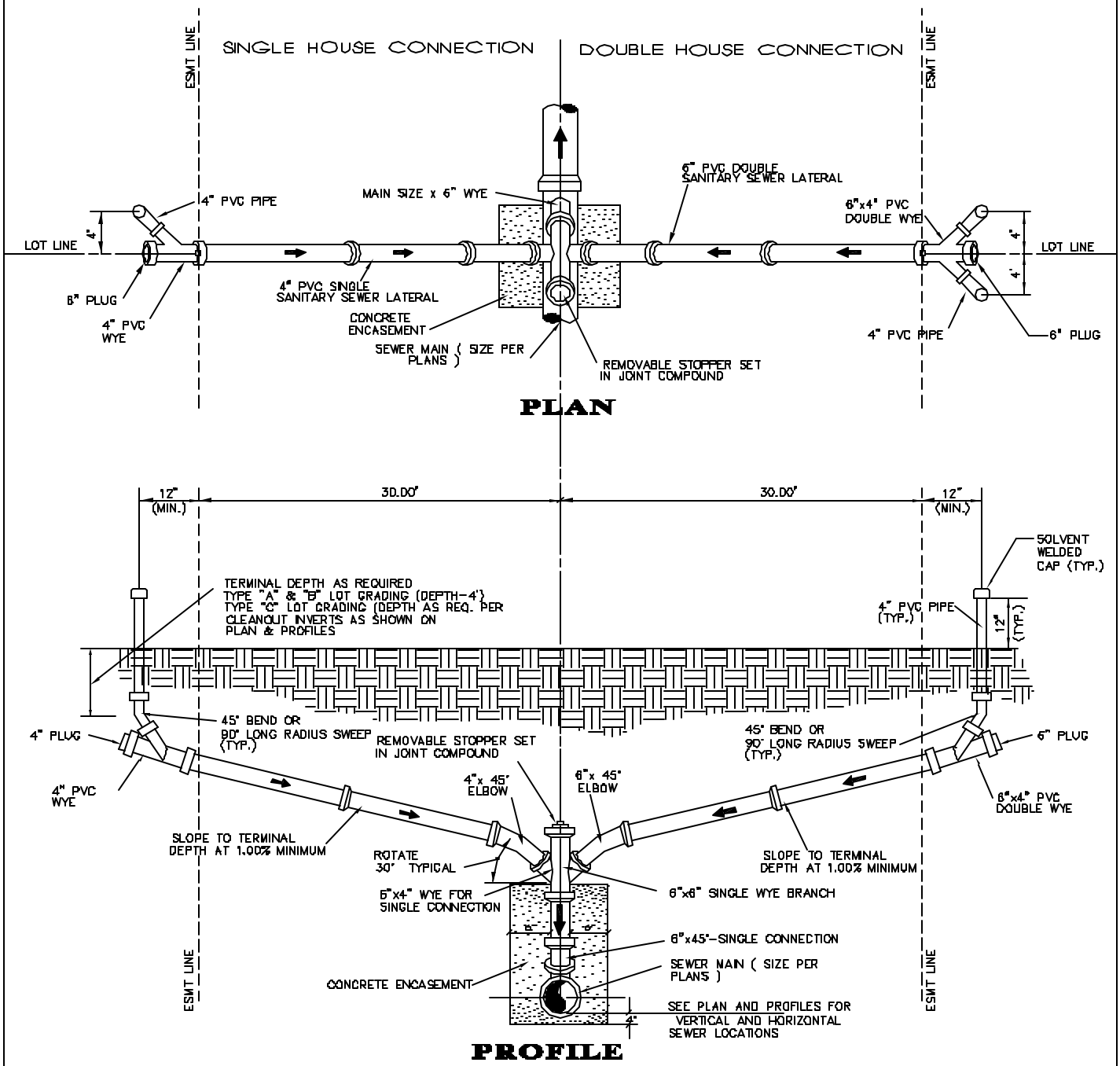

CHIMNEY CONNECTION

NOT TO SCALE

City of Leesburg
Standard Details

FARNER BARLEY AND ASSOCIATES, INC.
▲ ENGINEERS
▲ SURVEYORS
▲ PLANNERS
350 North Sinclair Avenue ◊ Tavares, Florida 32778 ◊ (352) 343-8481

April 2004

Detail S-7